Performances V4 Vane Air Motor

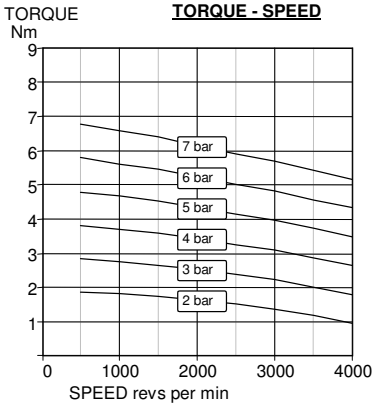

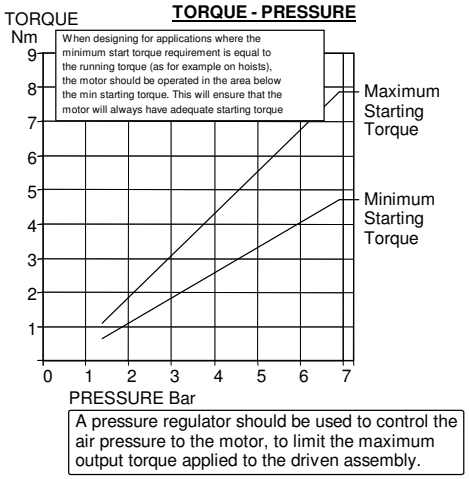

A pressure regulator should be used to control the air pressure to the motor, to limit the maximum output torque applied to the driven assembly.

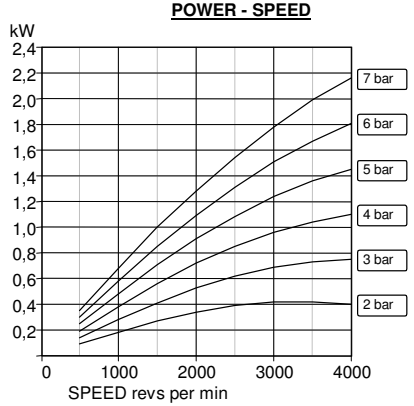

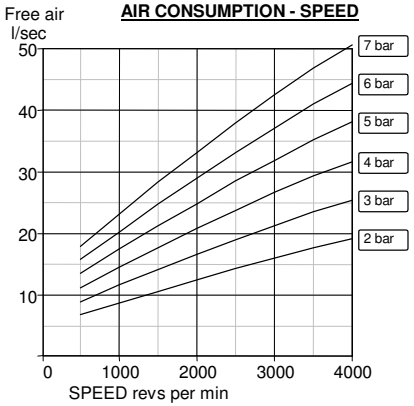

- Silencer supplied with motor.
- Motor is reversible.
- Maximum temperature -20°C to +60°C (-4°F to +140°F).
- Maximum temperature for non ATEX applications: -20°C to +80°C (-4°F to +176°F).

Airsupply lubrication and filtration:

Use 64 micron filtration or better. Choose a lubricator suitable for the flow required. Prior to initial startup, inject oil into the inlet port.

Lubricator drop rate 4-5 drop / minute continuous operations

Lubricator drop rate 9-12 drop / minute intermittent operation.

Maximum speed 4000 rpm

Life time depends highly on operational speed and air pressure.

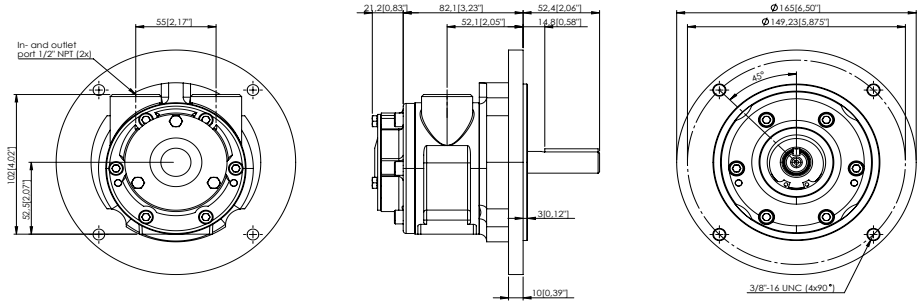

- Maximum temperature -20°C to +60°C (-4°F to +140°F)
- Silencer supplied with motor
- Max. Overhung Force on shaft 170 N (40 lbf.)
- Axial loads should be kept to a minimum
- Mass 3.30 kg

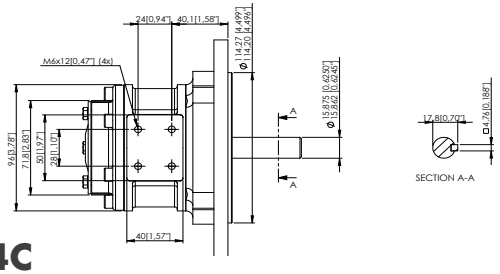

VA4C

Item	Part No.	Description	Qty	Kit No.
1	740-001	Body NPT	1	
2	740-018	Front plate	1	
3	740-002	Back plate	1	
4	740-062	Gasket		749-910
5	740-910	Rotor	1	
6	740-006	Ejection ring	2	
7	740-105	Rotor blade	4	749-910
8	740-008	Cover plate	1	
9	808-030	O-ring	1	749-910
10	808-054	Shaft seal	1	749-910
11	720-100	Seal backing ring	1	
13	804-052	Circlip	1	749-910
14	806-024	Dowel pin	4	
15	807-025	Bearing	1	
16	807-028	Bearing	1	
18	811-020	Key	1	
21A	809-007	Screw	8	
21B	809-007P	Screw	4	
23	802-001	Screw	3	
	749-910	V4 Seal Kit		

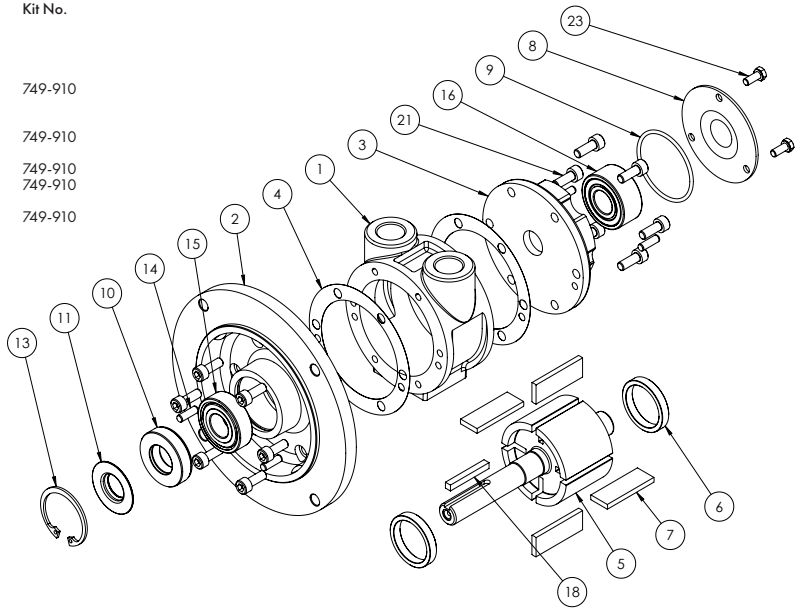

Performances V6 Vane Air Motor

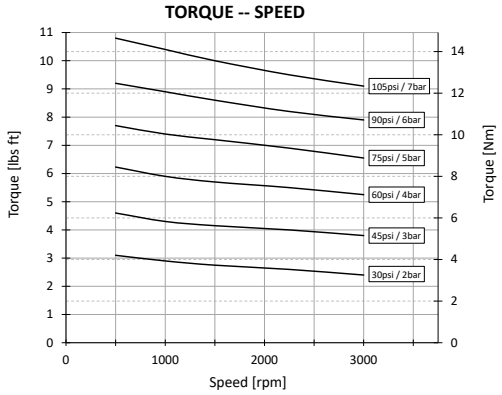

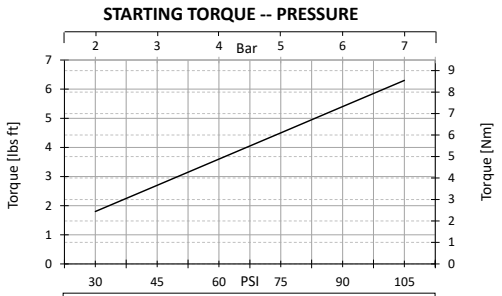

When designing for applications where the minimum start torque requirement is equal to the running torque (in hoists for example) the motor should be operated in the area below the starting torque.

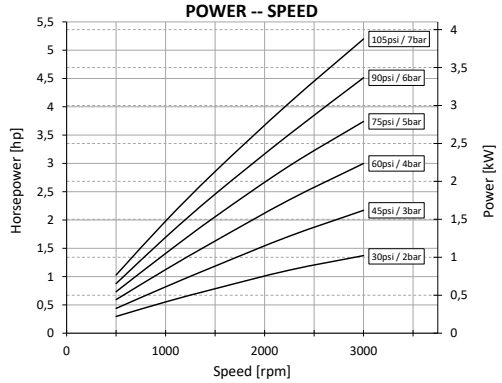

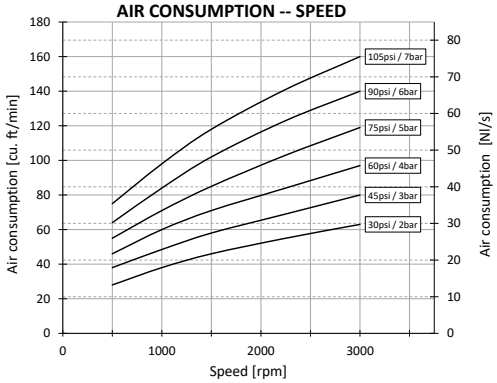

- Silencer supplied with motor.
- Motor is reversible.
- Maximum temperature -20°C to +60°C (-4°F to +140°F).
- Maximum temperature for non ATEX applications: -20°C to +80°C (-4°F to +176°F).
- A pressure regulator should be used to control the air pressure to the motor, to limit the maximum output torque applied to the driven assembly.

Airsupply lubrication and filtration:

Use 64 micron filtration or better. Choose a lubricator suitable for the flow required. Prior to initial startup, inject oil into the inlet port.

Lubricator drop rate 5-6 drop / minute continuous operations

Lubricator drop rate 10-12 drop / minute intermittent operation.

Maximum speed 3000 rpm

Life time depends highly on operational speed and air pressure.

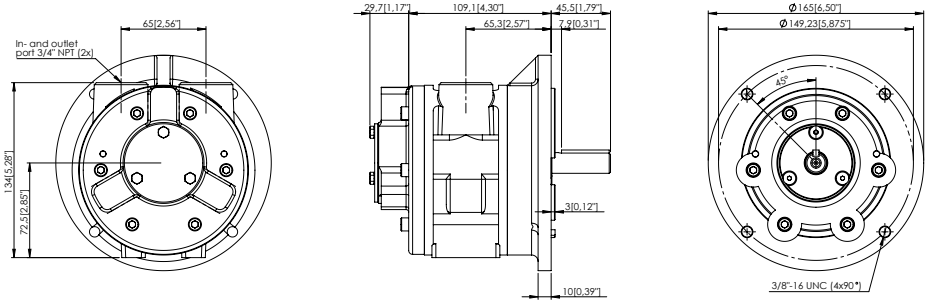

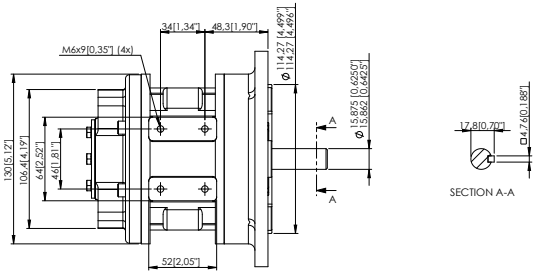

- Maximum temperature -20°C to +60°C (-4°F to +140°F)
- Silencer supplied with motor
- Max. Overhung Force on shaft 300 N (70 lbf.)
- Axial loads should be kept to a minimum
- Mass 10 kg

Item	Part No.	Description	Qty	Kit No.
1	760-001	Body NPT	1	
2	760-018	Front plate	1	
3	760-002	Back plate	1	
4	760-062	Gasket		769-910
5	760-911	Rotor	1	
6	760-006	Ejection ring	2	
7	760-005	Rotor blade	4	769-910
8	760-008	Cover plate	1	
9	760-009	Gasket	1	769-910
10	808-052	Shaft seal	1	769-910
11	760-017	Seal housing	1	
12	808-031	O-ring	1	769-910
13	804-052	Circlip	1	769-910
14	806-024	Dowel pin	4	
15	807-025	Bearing	1	
16	807-028	Bearing	1	
18	811-020	Key	1	
21	809-007	Screw	6	
22	809-009	Screw	6	
23	805-006	Screw	3	
24		Screw	3	
	769-910	V6 Seal Kit		

